Protec

Protec Fire Detection plc

6000*PLUS*/HT/SVAD - Heat Sensor Plus Sounder and Visual Alarm Device

Fire Detection - Addressable

- Ideal where Smoke Detection is Unsuitable
- Integrated Electronic Sounder
- Integrated EN54-23 Visual Alarm Device
- Loop Powered
- Low Current
- Programmable Volume Control
- Integral Short Circuit Isolator
- Protec Algo-Tec™ 6000*PLUS* Protocol
- Devices Display Address Number
- FAST™ Addressing
- VAD Classification Adjustable from 3m to 7.5m Room Coverage Volume

The Protec Algo-Tec™ 6000*PLUS* sensor range has been developed to incorporate advanced fire sensing technology, electronic sounders, high intensity LED visual alarm devices (VAD) and speech enhanced talking sounder capability, all integrated within the sensor head and powered from the loop.

6000*PLUS*/HT/SVAD
Interactive addressable heat sensor with low thermal mass thermistor, giving fast response to temperature increases.

The intelligent sensor data is evaluated by the Protec Algo-Tec™ 6000*PLUS* interactive programmable algorithms.
Suitable for applications where smoke detection is unsuitable but require a high sensitivity heat detector. Examples are boiler rooms, kitchens, laundries and ventilated areas.

Sensor Sounder - The above Protec Algo-Tec™ 6000*PLUS*/HT/SVAD sensor is equipped with an integrated loop powered electronic sounder with three programmable sounder tone options, constant, pulse or warble selectable by the control panel along with adjustable volume control. A loop short circuit isolator is also incorporated within the head. The sensor sounder tones are compatible with the full range of Protec 6000 electronic sounders.

Sensor VAD - Compliance with DDA legislation is assisted by the addition of the Protec visual alarm device (VAD) to the 6000*PLUS*sensor, to warn those with hearing impairments or in noisy environments. The VAD utilises a high intensity LED with lower power consumption and increased reliability when compared to alternative indicators.
The VAD is located in the centre of the sensor, so can be viewed from all angles. Suitable for ceiling mounting the VAD distributes light in a cylindrical pattern to achieve the required minimum illumination of 0.4lux over the entire coverage area in accordance with EN54-23.
The maximum mounting height is 3m with a coverage diameter of 7.5m.
For smaller areas the device can be programmed on-site for coverage diameter of 3m or 5m at reduced power.

6000*PLUS*/HT/SVAD Technical Specification

Dimensions (mm)

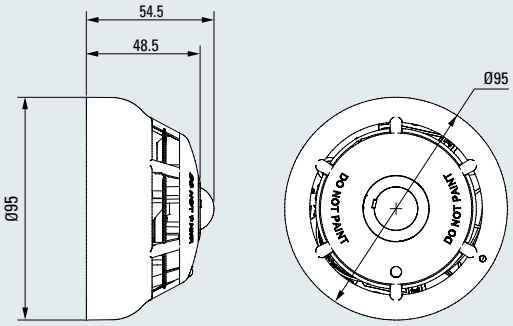

Typical Wiring using 6000*PLUS*/BASE

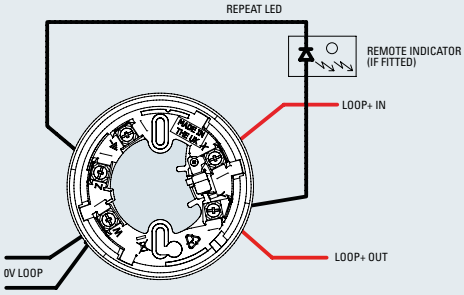

Technical Specification:

Environment	-10˚C to +50˚C (95% R.H. non condensing)
Ingress Protection	IP21C
Applicable Standards	EN 54-3, 5, 17 & 23, CE Marked
Weight (excluding base)	108.6g
Loop Powered	Yes
Loop Voltage	18 - 28V
Loop Standby Load	0.55mA
Peak Alarm Load	24mA
Mounting Height	3m
Coverage	7.5m, 5m or 3m cylindrical diameter
VAD Flash Rate	1Hz or 0.5Hz white flash
Isolator	Yes
Device Protocol	Algo-Tec™ 6000*PLUS*

Design Guidance

Protec VAD's have been approved to BS EN 54-23 and use the rating codes below:

C-x-y (eg C-3-7.5)

Where:

- **C** is ceiling mounted
- **x** is the maximum height (M)
- **y** is the illumination diameter for the cylindrical volume (M)

BS EN 54-23 approved VAD's are approved as ceiling mounted and must provide a minimum illumination level of 0.4 lux for the stated volume

Table A: Direct Viewing

Coverage volumes for various ambient light levels (lux)

BS EN54-23 Rating	C-3-7.5
Mounting Position	Ceiling
Less than 100 lux	21dia
100 - 200 lux	18dia
200 - 300 lux	14.3dia
300 - 400 lux	10.5dia
400 - 500 lux	8.3dia
500 - 600 lux	6.8dia
600 - 700 lux	5.3dia
700 - 800 lux	3.8dia

Table B: Indirect Viewing

Coverage volumes for various ambient light levels (lux)

BS EN54-23 Rating	C-3-7.5
Mounting Position	Ceiling
Less than 100 lux	9.8dia
100 - 200 lux	9dia
200 - 300 lux	7.5dia
300 - 400 lux	6dia
400 - 500 lux	4.5dia
500 - 600 lux	3.8dia
600 - 700 lux	*
700 - 800 lux	*

Coverage volumes height, diameter, length and width dimensions are in metres.

* Where ambient light levels may, at any time, exceed 600 lux, direct viewing is preferred (CoP 001 clause 4.6.9.4)

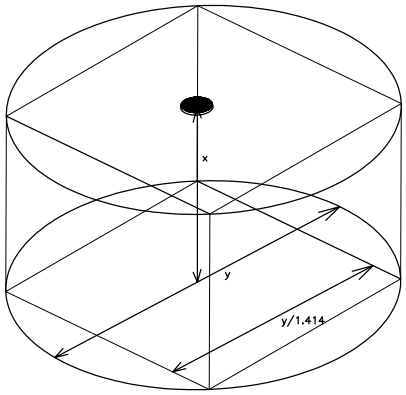

Protec Fire Detection plc

Company Policy is one of continuous improvement, we reserve the right to change specification without prior notice

Protec Fire Detection Plc, Protec House, Churchill Way, Nelson, Lancashire, BB9 6RT

Tel: 01282 717171 Fax: 01282 717273 Web: www.protec.co.uk Email: sales@protec.co.uk